REVISIONS			
REV.	DESCRIPTION	DATE	APPROVED
B	REVISED DIMENSIONS, ADDED TABLE	8/11/2009	

NOTES: UNLESS OTHERWISE SPECIFIED

1. INLET AND OUTLET CONNECTIONS TO BE MADE WITH 1.5IN SANITARY FITTINGS
2. OPTIONAL FITTINGS INCLUDE ANSI FLANGE, SWAGE, AND NPT

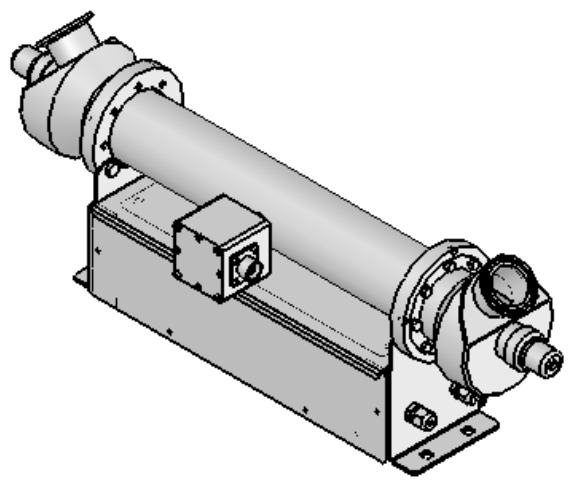

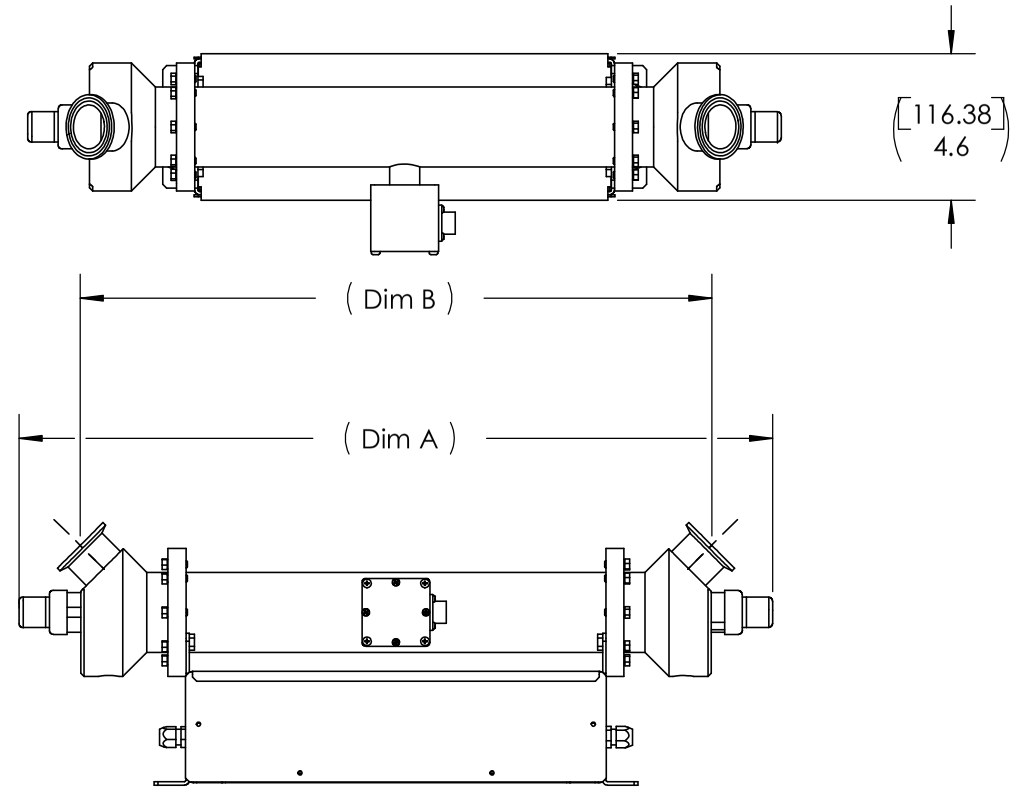

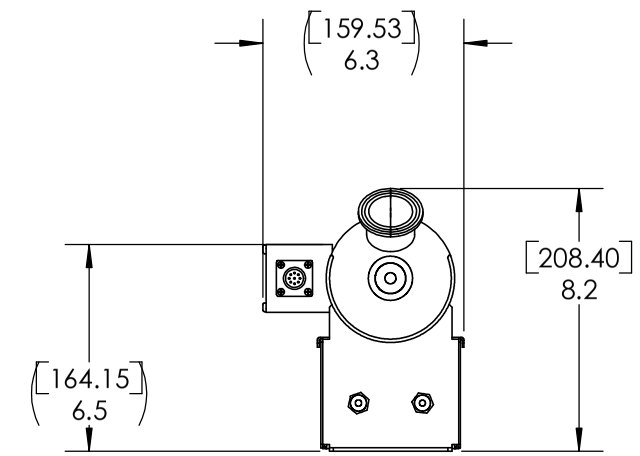

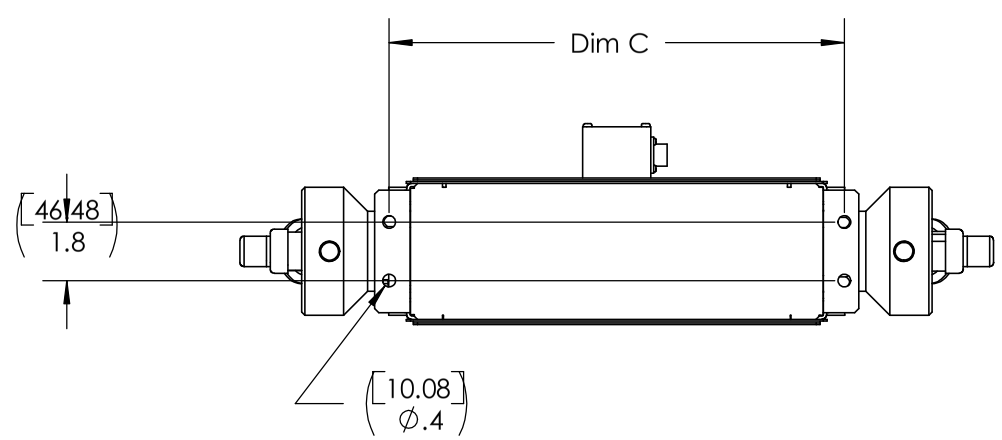

Model	DIM A	DIM B	DIM C	Rated Flow	Pressure Drop	Weight
UVS 222S	23.6	19.7	14.2	35 gpm/ 130 Lpm	4 psi/ 27.6k Npm	30 lbs/ 14 kgs
UVS228S	29.6	25.7	20.2	50 gpm/ 190 Lpm	10 psi/ 68.9k Npm	33 lbs/ 15 kgs
UVS238S	39.6	35.7	30.2	65 gpm/ 250 Lpm	20 psi/ 137.9k Npm	42 lbs/ 19 kgs

1) Rated Flow based on 99% UVT
2)Pressure Drop defined at Rated Flow
3)Weight is without water (Dry Weight)

PROPRIETARY AND CONFIDENTIAL
THE INFORMATION CONTAINED IN THIS DRAWING IS THE SOLE PROPERTY OF ULTRAVIOLET SCIENCES. ANY REPRODUCTION IN PART OR AS A WHOLE WITHOUT THE WRITTEN PERMISSION OF ULTRAVIOLET SCIENCES IS PROHIBITED.

NEXT ASSY | USED ON
APPLICATION

UNLESS OTHERWISE SPECIFIED:
DIMENSIONS ARE IN INCHES
TOLERANCES:
FRACTIONAL ± 1/32
ANGULAR: MACH ± .5° BEND ±1°
ONE PLACE DECIMAL ± .1
TWO PLACE DECIMAL ± .02
THREE PLACE DECIMAL ± .005

INTERPRET GEOMETRIC TOLERANCING PER: Y14.5M-94
MATERIAL N/A
FINISH N/A
DO NOT SCALE DRAWING

	NAME	DATE
DRAWN	A.KCOMT	01/23/09
CHECKED		
ENG APPR.		
MFG APPR.		
Q.A.		

COMMENTS:

UV SCIENCES

TITLE:
DIAGRAM, MOUNTING, 2IN SERIES 3 SYSTEMS

SIZE B | DWG. NO. 1675 | REV B
SCALE: 1:4 | SHEET 1 OF 1